Cross Section Drawing

StyleLine Top Awning Window
1 3/8" Nailfin Setback Frame

CAD File Scale	View	File Name	Units	Revision
NTS	Horizontal & Vertical	StyleLine_6410_TA_1.375in	Inch	11/2021

More Technical Documents can be found at **milgard.com/professionals**

Due to continual research and development, details may be changed at any time. ©2013 Milgard Mfg.

BOTTOM AWNING
SERIES 6410

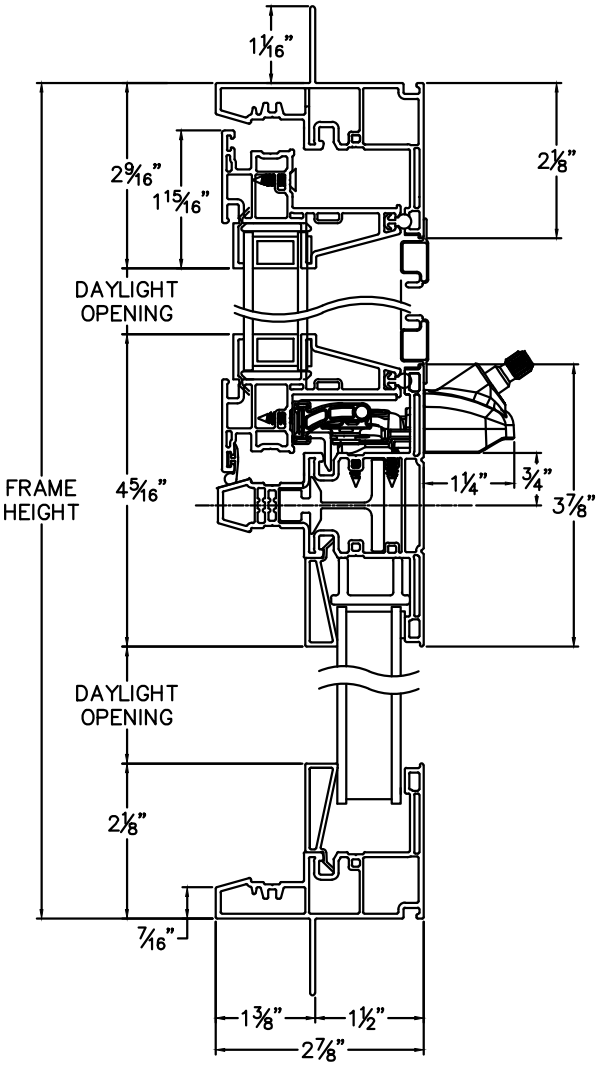

HEAD & SILL

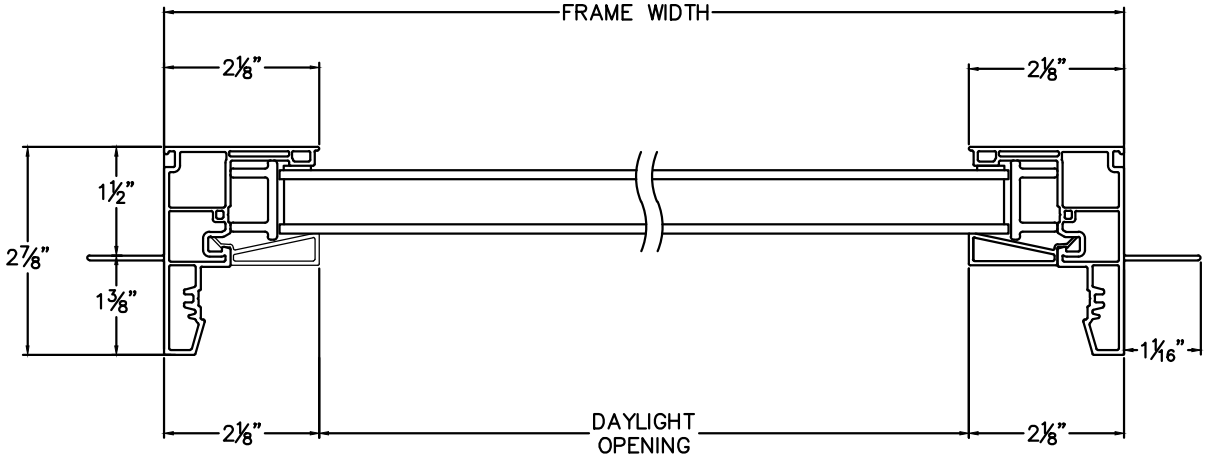

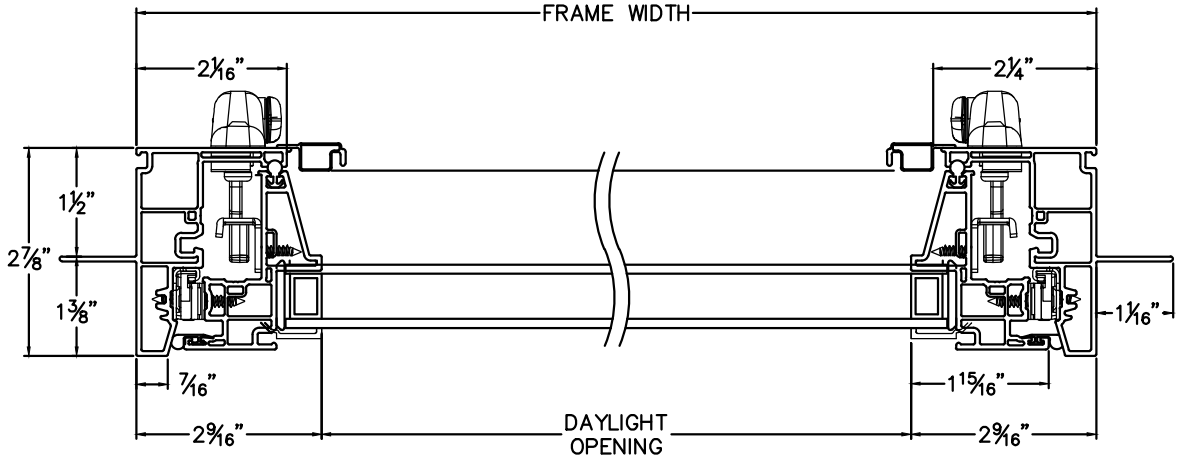

JAMBS